RevNo	Revision note	Date	Signature	Checked

ITEM NUMBER	QTY	PART NUMBER	PART NAME
1	1	SCE-20EL2008LP	Control Enclosure
2	1	–	Control and Pneumatics Stand
3	1	–	Hopper Assembly
4	1	–	Feeder Bowl Assembly
5	1	–	Gravity Track and Escapement Assembly

TOTAL ASSEMBLY DETAILS
COMMON ALL FC-24-21740

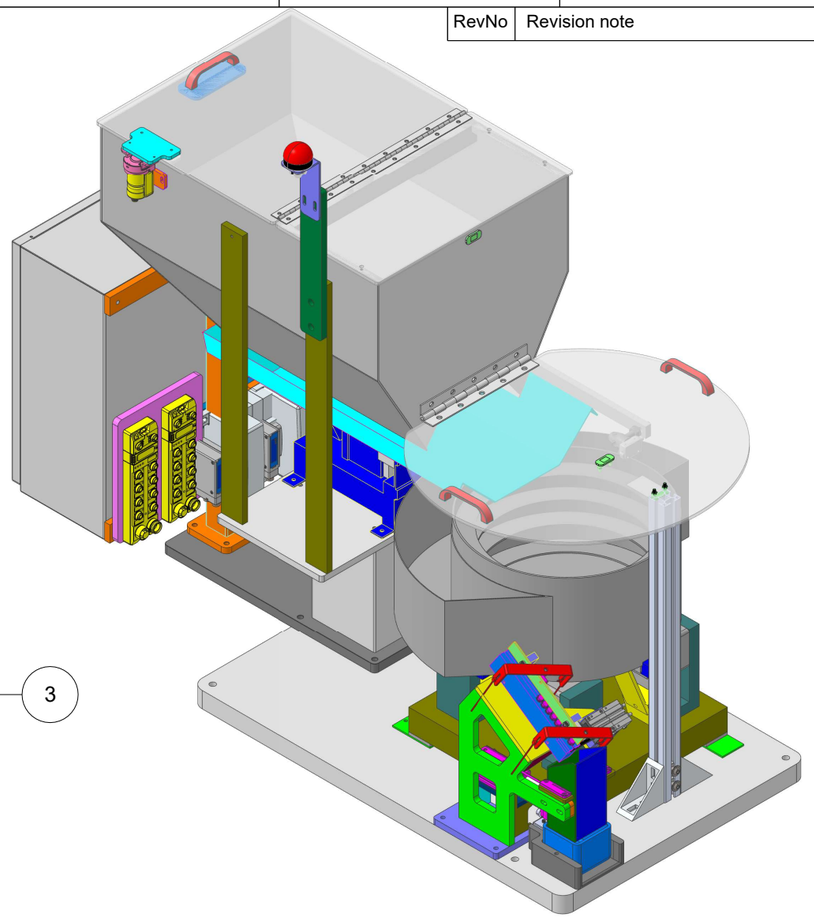

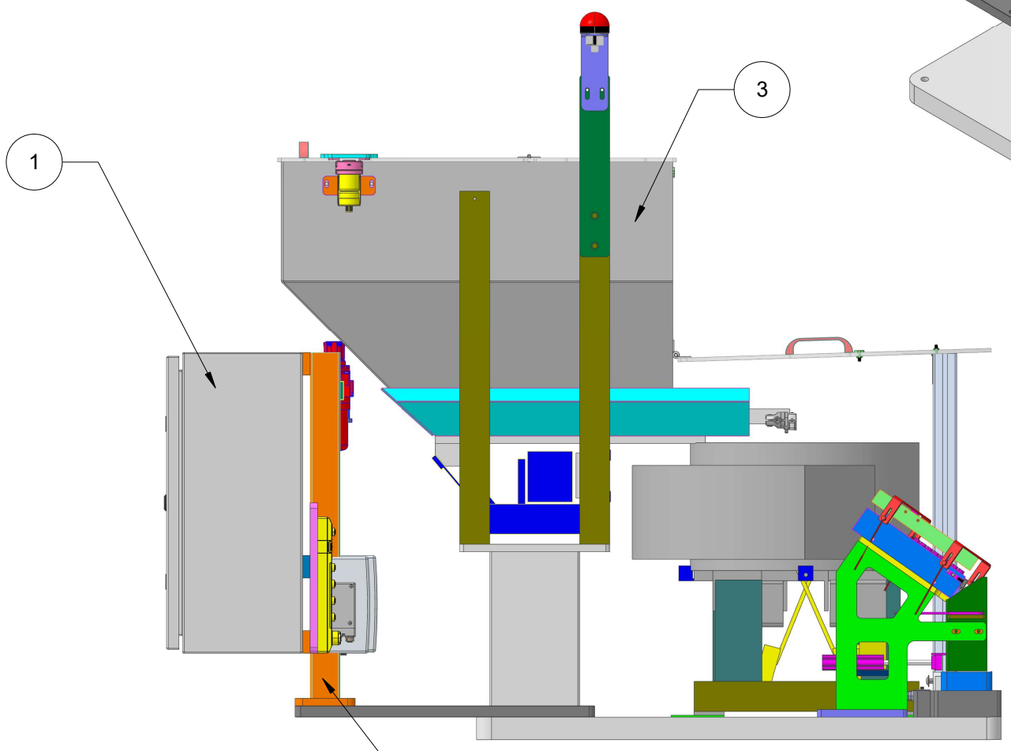

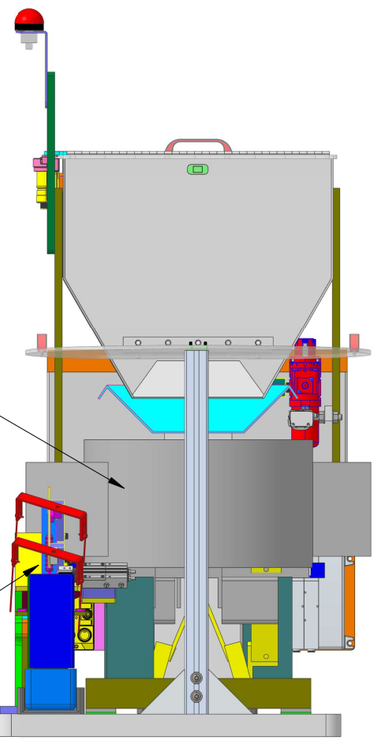

Itemref	Quantity	Title/Name, designation, material, dimension etc		Article No./Reference	
Drawn by D. BADER		Checked by	Approved by - date	File name	Date JULY 1ST, 2025	Scale 1:1

FEEDING CONCEPTS, INC.
Automatic Parts Feeding Equipment
15235 Herriman Blvd.
Noblesville, IN 46060
(317) 773-2040

TOTAL FEEDING SYSTEM ASSEMBLY

RHINO FC-24-21740	Edition	Sheet 1 OF 1